# *BATTERY SERVICE*

## INTRODUCTION

As long as the recommended battery is chosen for a particular application, the battery should withstand the normal operating conditions encountered during its useful life. This section covers the techniques, tips, and precautions associated with servicing batteries. Major topics include:

- Battery installation
- Care and maintenance

**CAUTION**
Before servicing a battery, read the appropriate safety information.

## BATTERY STORAGE

There are a few guidelines associates with battery storage. Following these guidelines will promote long shelf life and optimum performance.

### Storage Temperature

When a battery is stored, a very slow chemical reaction takes place between the plate materials and electrolyte, causing a slow discharge. This reaction, called a self-discharge, occurs more rapidly at higher temperatures.

If stored above 80°F for long periods of time, conventional filler cap batteries can self-discharge to 50% capacity in four months. These batteries require periodic charging if they are to be stored for 12 months or longer.

ACDelco Professional and Heavy-Duty Batteries have a very low self-discharge rate below 80°F. Although storage above 80°F increases self-discharge, ACDelco batteries stored at constant elevated temperatures (100°F) have a shelf life that:

- Is still three times as long as conventional wet antimony batteries.
- Is comparable to dry-charged batteries which are not vacuum sealed.
- Permits installation without charging where good stock rotation and inventory control is maintained (three turns or more a year).

Cold temperatures are not harmful to ACDelco batteries when they are fully charged. These batteries may be stored at temperatures as low as –20°F.

When ACDelco batteries are completely discharged, the electrolyte will freeze when stored below 20°F. To prevent electrolyte freezing and battery damage, do not store ACDelco batteries below 20°F if not fully charged.

The battery information contained in this publication is intended for a professional technicians. Please do no attempt any of the maintenance/repair procedures if you are not licensed or appropriately trained. Do not distribute or share the digital or printed material, including pdf versions of the content. Also, do not provide a link to this material to another website or email address. This material may be protected under copyright and trademark laws.

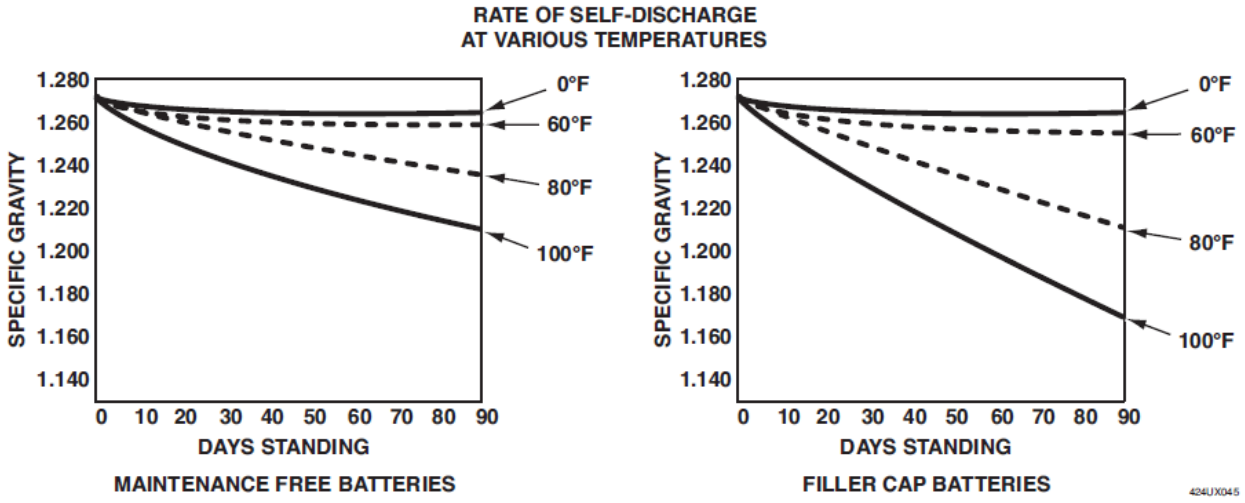


Figure 4-1, Self-Discharge Graph

### Stock Rotation

Battery stock should be rotated regularly. Observe the date codes on the battery so that sales and shipments follow a first in first out (FIFO) inventory pattern. Provided inventory levels are maintained properly, a new maintenance-free battery should never have to be charged. However, should charging become necessary, follow the procedures outlined later in this section.

### Storage Position

ACDelco maintenance-free batteries must be stored in an upright position at all times. Although these batteries have sealed covers, electrolyte can escape through the vent holes if batteries are tilted sideways or upside down. Stack batteries only if they are in cartons, and never more than three cartons high.

## BATTERY INSTALLATION

Battery installation may seem like a simple procedure, however this is one area in which abuse and damage can occur.

**NOTE:**
Before servicing a battery, read the appropriate safety information.

### General Precautions

To minimize the risk of damage and to prevent serious injury, always follow these precautions when installing a battery:

1. Shield your eyes with protective glasses/goggles when installing or servicing batteries.
2. Make sure the carrier and hold-down are clean.
3. Make sure the battery rests level when installed.
4. Tighten the hold-down and cable connections according to recommended specifications.
5. Make sure the cable connection surfaces on the cables and battery are clean (free of dirt and corrosion).

The battery information contained in this publication is intended for a professional technicians. Please do no attempt any of the maintenance/repair procedures if you are not licensed or appropriately trained. Do not distribute or share the digital or printed material, including pdf versions of the content. Also, do not provide a link to this material to another website or email address. This material may be protected under copyright and trademark laws.

6. Always connect the grounded cable last. Be aware that some applications may have positive ground.
7. Never hammer cable terminals onto battery posts. This can permanently damage the cover, undercover post connections, or post-to-cover connections.
8. Do not over torque the terminal bolts on side terminal batteries. Over torquing can strip the threads inside the terminal.
9. If the vehicle uses a vent tube to channel battery gases to the outside, attach the tube(s) to the vent(s) in the edge of the battery cover. Use acid resistant tubing, and be sure the tubing is not cut, cracked, plugged or kinked anywhere between the battery and the outside end to assure that the gases are vented away.

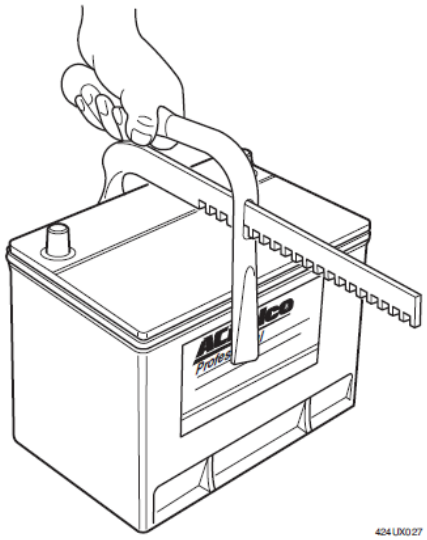

Figure 4-2, Battery Carrier

## Handling

Lifting tools are available for carrying batteries. ACDelco recommends the type that grasps the battery case shown in Figure 4-2. When grasping the case, do so on the sides, not on the ends. This transfers pressure to the cell partitions and prevents the case from flexing. Movement of the case under the lifting tool pads can cause the battery to slip out of the tool. Do not tilt the batteries when carrying them.

Keep the battery within 45° of level as it is moved into the vehicle. Tilting the battery beyond this amount causes the internal vent system to become flooded with electrolyte and may result in acid leaking from the vents.

In the event the battery is temporarily tilted beyond these limits, no harm will usually be done to the battery unless electrolyte actually leaks out through a vent port. Internal baffles in the battery will normally return the electrolyte to the cell areas if the battery is promptly set upright and allowed to stand without use for a short period of time to permit the internal baffle areas to drain. If the battery is used too quickly, internal gassing can push the displaced electrolyte out through a vent port as liquid or foam.

The battery information contained in this publication is intended for a professional technicians. Please do no attempt any of the maintenance/repair procedures if you are not licensed or appropriately trained. Do not distribute or share the digital or printed material, including pdf versions of the content. Also, do not provide a link to this material to another website or email address. This material may be protected under copyright and trademark laws.

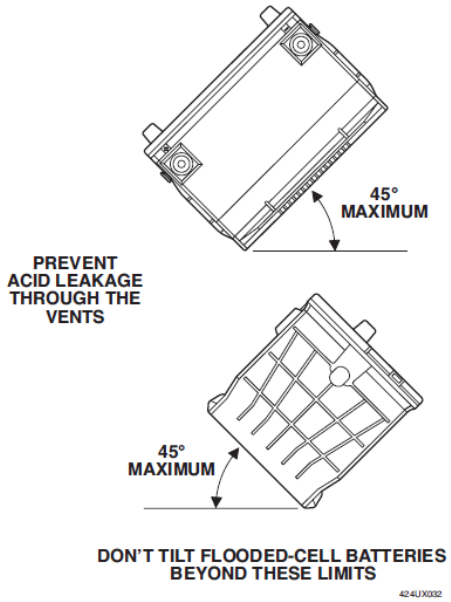


Figure 4-3, Battery Maximum Inclination

## Carrier and Hold-Down

The battery carrier and hold-down should be free of dirt and corrosion prior to installing the battery. Make sure the carrier is in sound mechanical condition, capable of supporting the battery in a level position. To prevent the battery from shaking in its carrier, the hold-down bolts should be tightened to specification.

Trays for bottom hold-downs commonly have a formed ledge that fits over the ramp on the back side of the battery. Be sure the hold-down ramp on the battery case is firmly positioned under this ledge before installing the hold-down on the front side. Position the hold-down wedge and install the bolt. For heavy-duty applications (such as those using Group 31 batteries), the batteries are often mounted in boxes in sets of two or four. The batteries must be properly secured inside those boxes. Frame type hold-downs that surround one or more of the batteries are often used.

Do not overtighten the bolts so that the hold-down clamp applies excessive pressure to the battery case. Always follow the manufacturer's torque specifications for battery hold downs.

The battery information contained in this publication is intended for a professional technicians. Please do no attempt any of the maintenance/repair procedures if you are not licensed or appropriately trained. Do not distribute or share the digital or printed material, including pdf versions of the content. Also, do not provide a link to this material to another website or email address. This material may be protected under copyright and trademark laws.

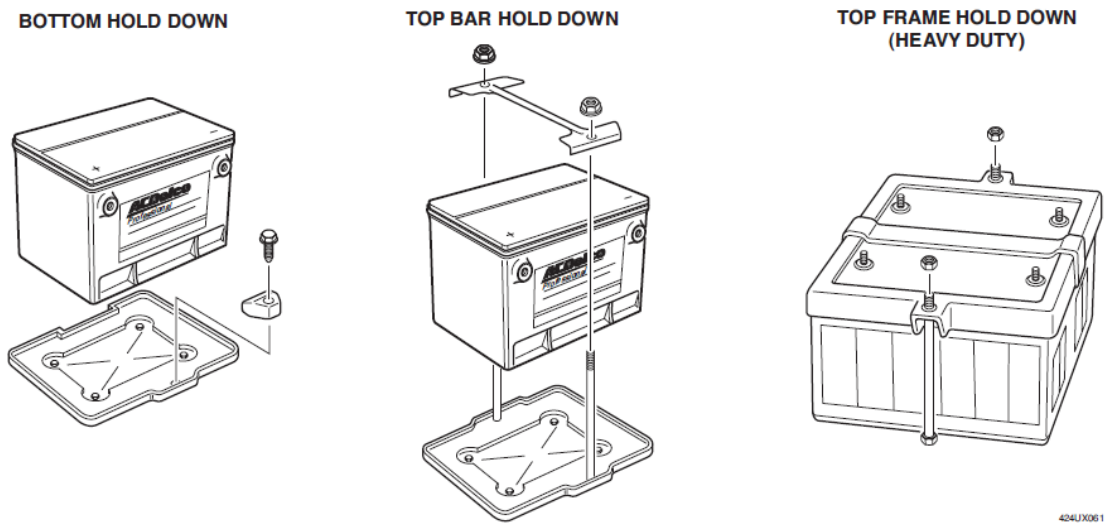


Figure 4-4, Battery Installation–Hold-Down Assembly

## Installation Procedures

- Be sure to clean out the carrier so that the battery will rest properly in the bottom of the carrier. Hold-downs should be functional and properly tightened.
- Battery cable connections should be securely tightened to torque specifications as shown in Figure 4-6.
- Connect the grounded battery terminal last to avoid short circuits which may damage electrical system.
- The tear-off Replacement Warranty Statement on all ACDelco batteries should be removed and given to the vehicle owner at the time of installation. The warranty insert must not be removed from the label.
- In some applications, the battery handle cannot be used. The handle may have to be removed for proper installation. Always check for proper clearance under the hood.
- If installation is performed in sub-zero temperature, it is beneficial to boost charge for 15 minutes at 15 amperes in order to achieve maximum battery performance.
- If engine does not crank satisfactorily after following the above instructions and the open circuit voltage is 12.2 volts or lower, the battery should be recharged.

Perform the Parasitic Load Drain Test as directed in Section 4 under Battery Troubleshooting and Diagnosis. A battery that passes the test procedure indicates a need for further checking of the vehicle fuel, ignition, cranking, and charging systems.

## Battery Insulator

If the vehicle uses a battery insulator, it is usually possible to remove the insulator from the old battery and place it on the new battery. If not, replace the insulator.

The battery information contained in this publication is intended for a professional technicians. Please do no attempt any of the maintenance/repair procedures if you are not licensed or appropriately trained. Do not distribute or share the digital or printed material, including pdf versions of the content. Also, do not provide a link to this material to another website or email address. This material may be protected under copyright and trademark laws.

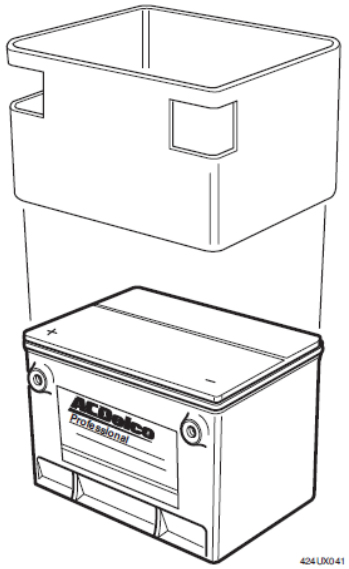

Figure 4-5, Installing the Insulator

## Cable Connections

To ensure good electrical contact, the cables should be clean and tight on the battery. If the posts or cables are corroded, disconnect the cables and clean the terminals and clamps separately using a wire brush and a solution of baking soda and water.

Connect the positive cable to the battery first, then connect the ground (negative) cable.

The cable connectors used with maintenance-free batteries seal the connection, making a permanently tight and clean connection. Do not coat the cable connectors or battery terminals with petroleum jelly or other corrosion inhibitors.

When securing the cables to the battery terminals, observe the torque specifications in Figure 4-6.

Overtightening may cause damage to the battery

Undertightening may result in an intermittent connection.

The battery information contained in this publication is intended for a professional technicians. Please do no attempt any of the maintenance/repair procedures if you are not licensed or appropriately trained. Do not distribute or share the digital or printed material, including pdf versions of the content. Also, do not provide a link to this material to another website or email address. This material may be protected under copyright and trademark laws.

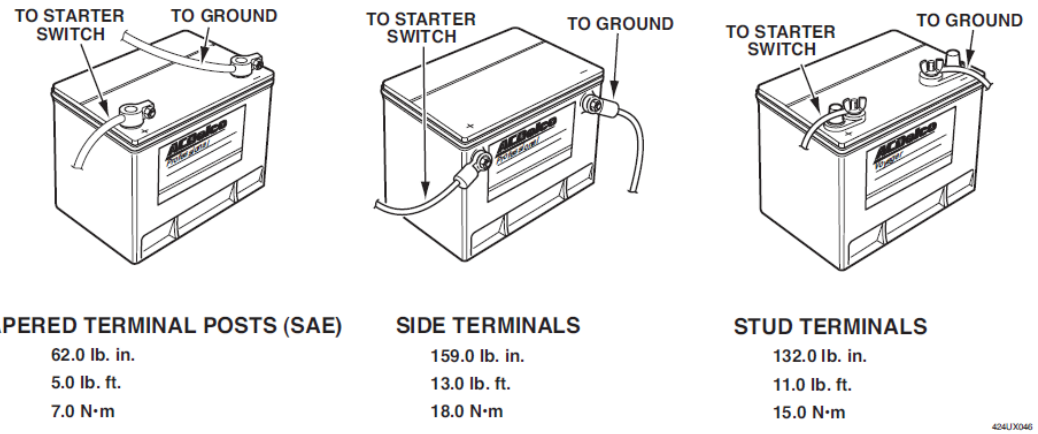


Figure 4-6, Battery Connections and Proper Torque

## Auxiliary Electrical Equipment Installations

The use of electronics on today's vehicles require that both power and ground connectors for add-on (auxiliary) electrical equipment (mobile radios, light bars, etc.) be made at the battery.

ACDelco has the parts to make these connections while maintaining the corrosion resistance and electrical integrity designed into the ACDelco side terminal battery.

The Side Terminal Adaptor Package 1846855, when combined with the longer battery bolt (P/N 12004188) and spacer (P/N 12354951), will provide the corrosion-resistant connection illustrated in Figure 4-7.

ACDelco recommends all customers involved in add-on (auxiliary) electrical equipment installation follow this procedure.

**Note**
For battery cable information, see ACDelco Wire & Cable 16A-100 catalog.

The battery information contained in this publication is intended for a professional technicians. Please do no attempt any of the maintenance/repair procedures if you are not licensed or appropriately trained. Do not distribute or share the digital or printed material, including pdf versions of the content. Also, do not provide a link to this material to another website or email address. This material may be protected under copyright and trademark laws.

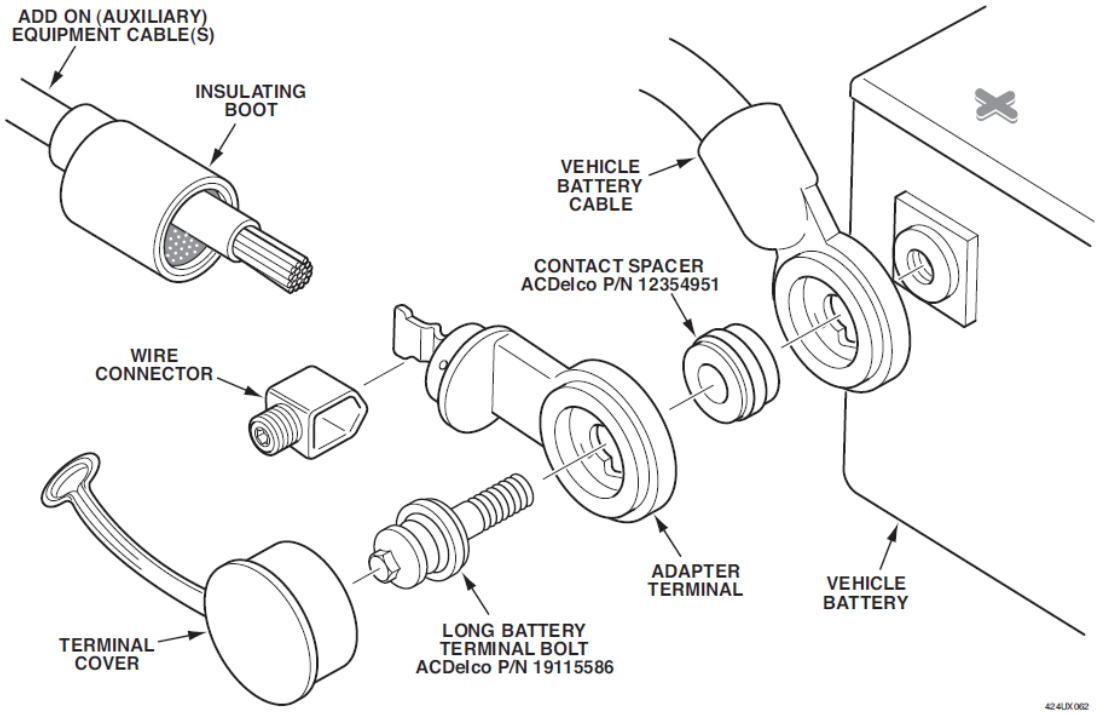


Figure 4-7, Terminal Adapter Package

## Care and Maintenance

### Carrier and Hold-Down

Check the mechanical integrity of the underhood battery carrier. It should be capable of supporting the battery in a level position. Also, make sure the hold-down is tightened to specifications. Normal vehicle vibration can loosen the hold-down clamp over time.

### Cables and Connections

All connections should be clean and tight. Corrosion tends to build up on filler cap battery terminals and cable clamps. Disconnect the cables and clean the battery terminals and cable clamps separately, using a wire brush and baking soda/water solution. If one or more of the cables is deteriorated from excessive corrosion, it should be replaced.

### Battery Case

Corrosion matter from the terminals can drop onto the battery cover. Since the corrosion is acid based, it can gradually damage the plastic battery cover. Regularly wipe the battery cover and case with a cloth wetted with a baking soda and water solution.

The amount of care and maintenance required varies dramatically between maintenance-free batteries and conventional filler cap batteries.

The battery information contained in this publication is intended for a professional technicians. Please do no attempt any of the maintenance/repair procedures if you are not licensed or appropriately trained. Do not distribute or share the digital or printed material, including pdf versions of the content. Also, do not provide a link to this material to another website or email address. This material may be protected under copyright and trademark laws.

## Filler Cap Batteries

It's normal for a conventional filler cap battery to consume electrolyte. It's therefore necessary to check the electrolyte level in all cells on a regular basis. If the level is low in any cell, fill the cell with tap water to the height of the fill indicators.

**Note**
Do not overfill the cells. Overfilling the cells creates excess electrolyte which can be forced from the cell by gas formed in the battery. This, in turn, causes excessive corrosion which damages metal connections and shortens battery life.

## Maintenance-Free Batteries

Under normal operating conditions, maintenance-free batteries never require the addition of water and should never require cleaning.

If so equipped, you can visually check the battery's state of charge using the built in hydrometer on the top of the battery.

- When the state of charge is 65% or greater, a green dot appears in the battery's hydrometer.
- When the state of charge drops below 65%, the green dot disappears, darkening the hydrometer window.
- If electrolyte falls below the lower end of the hydrometer, the window has a clear or yellow appearance. The battery should not be load tested and should be replaced if there is a cranking complaint.

If the battery is not equipped with a built-in hydrometer, check the open circuit voltage. Open circuit voltage of 12.2 or lower requires recharging if there is a cranking complaint.

## AGM Batteries

ACDelco AGM Batteries are termed "maintenance-free" batteries. They do not contain free electrolyte and do not require the periodic addition of water. The electrolyte supply contained in the glass mat separators is sufficient for the life of the battery.

Never attempt to open the battery or make holes in the case or cover. The case and cover are heat sealed together to prevent gases from entering or escaping except through the vent system. If the case or cover is broken, replace the battery. Aside from the dangers of escaping explosive gases, an AGM battery with a broken seal will quickly lose its ability to perform when the plates are exposed to elements in the outside air.

When used with sealed side terminal connections, no periodic inspection and cleaning of the terminal connections are needed.

When top terminals or non-sealed side terminal connectors are used, periodically disassemble and clean the cable connections. Wire brush the connecting surfaces until a shiny metal surface is obtained. Depending on the environment in which the vehicle is used, performing this operation every 6 to 12 months is recommended.

The battery information contained in this publication is intended for a professional technicians. Please do no attempt any of the maintenance/repair procedures if you are not licensed or appropriately trained. Do not distribute or share the digital or printed material, including pdf versions of the content. Also, do not provide a link to this material to another website or email address. This material may be protected under copyright and trademark laws.

# BATTERY TROUBLESHOOTING AND DIAGNOSIS

Occasionally, a battery test may show satisfactory performance, yet the battery may fail during service. This section includes a quick and easy test to verify battery performance and highlights some of the common reasons why good batteries can fail, including:

- Accessories left on
- Frequent slow speed or short distance driving
- Faulty charging system
- Excessive electrical load
- Malfunctioning electrical system
- Incorrect charging system diagnosis
- Faulty battery connections
- Long-term vehicle storage
- Frozen battery.

# ACCESSORIES LEFT ON

Leaving any accessory on for an extended period of time causes a drain that can gradually deplete the battery.

Electronic components consume energy even when turned off. This is known as parasitic drain.

## Parasitic Drain Test

Description–Parasitic Loads

- Parasitic load drains are small battery current drains.
- Normal parasitic drains can discharge a battery when a vehicle is not used for several weeks.
- Normal parasitic drains are caused by devices that retain electronic memory, such as:

| Devices | Drain (mA) |
|---|---|
| • Powertrain control module | 4.0 |
| • Antilock brake system module | 1.5 |
| • Inflatable restraint system module | 0.1 |
| • Radio memory | 5.3 |
| • Generator | 2.0 |

- Accessories such as antitheft systems and cellular phones also retain electronic memories and create parasitic drains.

The battery information contained in this publication is intended for a professional technicians. Please do no attempt any of the maintenance/repair procedures if you are not licensed or appropriately trained. Do not distribute or share the digital or printed material, including pdf versions of the content. Also, do not provide a link to this material to another website or email address. This material may be protected under copyright and trademark laws.

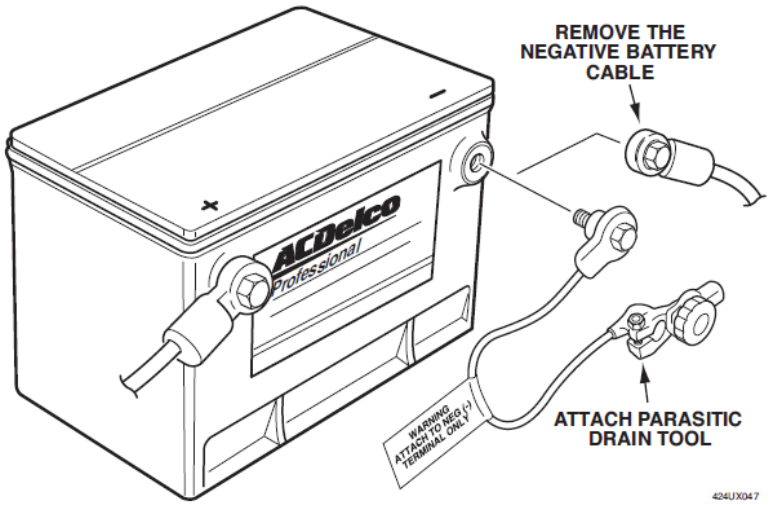


Figure 4-18, Parasitic Drain Test

The battery information contained in this publication is intended for a professional technicians. Please do no attempt any of the maintenance/repair procedures if you are not licensed or appropriately trained. Do not distribute or share the digital or printed material, including pdf versions of the content. Also, do not provide a link to this material to another website or email address. This material may be protected under copyright and trademark laws.

## Diagnosis–Parasitic Drain Test

Tools required:

- J 38758 Parasitic Drain Test Switch
- DVOM
- 10-amp Fused Jumper Wire.

**IMPORTANT**

If an ammeter other than the J 39200 is used, ensure that the vehicle does not have a high-current drain that would damage the ammeter when connected to the circuit.

1. Disconnect the negative battery cable.
2. Connect the male end of the parasitic Drain Test Switch J 38758 (1) to the negative battery terminal.
3. Turn the test switch to OFF (1) (open switch).
4. Connect the negative battery cable (2) to the female end of the test switch.
5. Turn the test switch to ON (3) (close switch).

**NOTE**
Do not turn the parasitic drain test switch to the OFF position with the engine running. Damage will occur to the vehicle's electrical system.

6. Road test the vehicle. Activate all accessories, including the air conditioning system and the radio.
7. Turn ignition key to the OFF position.
8. Wait 15 minutes before continuing the test.

- This lets the electronically timed components power down, preventing false parasitic drain readings.

nded for a professional technicians. Please do no attempt any of the maintenance/repair procedures if you are not licensed or appropriately trained. Do not distribute or share the digital or printed material, including pdf versions of the content. Also, do not provide a link to this material to another website or email address. This material may be protected under copyright and trademark laws.

1

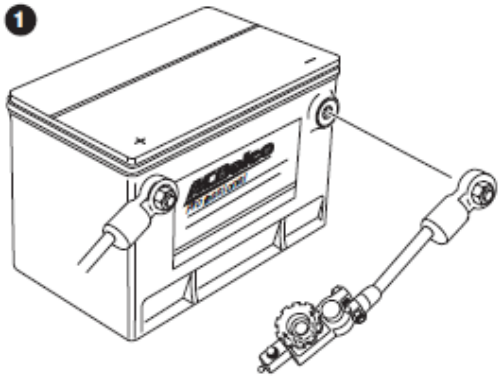

2

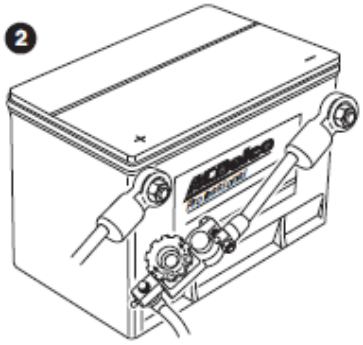

3

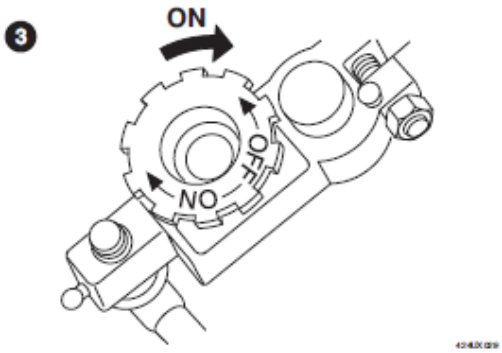


The battery information contained in this publication is intended for a professional technicians. Please do no attempt any of the maintenance/repair procedures if you are not licensed or appropriately trained. Do not distribute or share the digital or printed material, including pdf versions of the content. Also, do not provide a link to this material to another website or email address. This material may be protected under copyright and trademark laws.

9. Connect the 10-amp fused jumper wire (4) to the terminals of the test switch. Turn test switch to OFF (open switch).

- If the fuse does not fail, the multimeter can be installed. Less than 10 amps current is present.

10. Turn the test switch to ON (5) (close switch).
11. Remove the fuse jumper wire and check for a blown fuse.
12. If the fuse did not blow, set the digital multi-meter to the A/mA scale (6).
13. Connect the multimeter to the terminals (6) of the test switch.

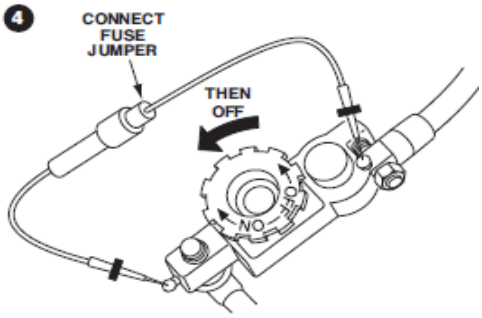


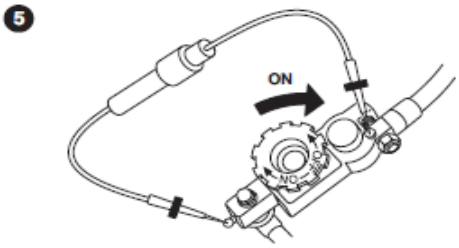


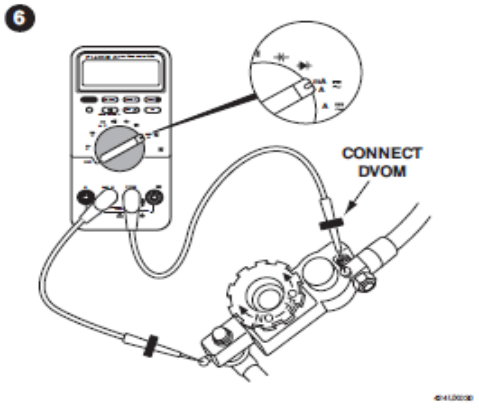


The battery information contained in this publication is intended for a professional technicians. Please do no attempt any of the maintenance/repair procedures if you are not licensed or appropriately trained. Do not distribute or share the digital or printed material, including pdf versions of the content. Also, do not provide a link to this material to another website or email address. This material may be protected under copyright and trademark laws.

14. Turn the test switch to OFF (7).

- Current is now flowing through the ammeter option of the multimeter.
- Wait one minute.
- Observe the DVOM. This is the parasitic drain value.

**NOTE**
An inductive field coil may be utilized in place of the above procedure.

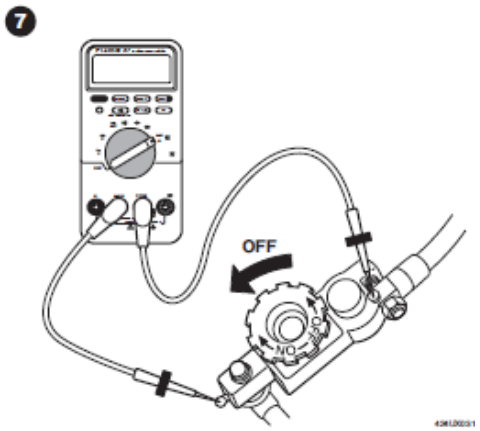


## Excessive Slow-Speed Driving

Long-term slow-speed driving can result in an undercharged battery on some older vehicles. Simply recharge the battery and inform the driver that continued long-term slow-speed driving may result in another undercharged battery condition.

## Short Distance Driving in Cold (Winter) Weather

Driving in winter conditions can place additional demands on the battery such as:

- Cold weather cranking
- High blower speed
- Window defrosters
- Heated seats and mirrors
- Increased nighttime driving using headlights.

## Faulty Charging System

Any of the following charging system problems can undercharge a battery:

- Loose slipping belt: Dramatically reduces generator charging output to the battery
- High resistance in charging system wiring (caused by improper length, size, or quality): Reduces charging output to battery
- Defective generator or regulator: Results in low or no charge to the battery
- Loose connections in the starting and charging circuits.

## Excessive Electrical Load

Check to see whether additional aftermarket accessories have been added to the vehicle that place an excessive electrical load on the charging system. The load may exceed battery and/or generator capacity.

The battery information contained in this publication is intended for a professional technicians. Please do no attempt any of the maintenance/repair procedures if you are not licensed or appropriately trained. Do not distribute or share the digital or printed material, including pdf versions of the content. Also, do not provide a link to this material to another website or email address. This material may be protected under copyright and trademark laws.

## Defective electrical System

Any of the following electrical system problems can affect battery performance:

- Short to positive
- Short to ground
- Open wire.

## Incorrect Charging System Diagnosis

If you made repairs to the charging system:

- Make sure you replaced the correct component.
- Check the new component to make sure it is operating properly.

## Faulty Battery Connections

Clean and tight battery connections are required for satisfactory battery performance. Any of the following conditions may cause problems:

- Loose cable to the battery connections
- Excessive corrosion at the cable or battery
- Corroded or damaged battery cables
- Other loose connections.

## Improper Previous Charging

If the battery was previously charged incorrectly, following the proper recharging procedure may fix the problem. Refer to Battery Charging beginning on page 4-28 for proper charging procedures.

## Long-Term Vehicle Storage

All vehicles are equipped with accessories (clocks, computers with keep-alive memory, radios with station presets, etc.) that place a small current drain on the battery.

Follow the procedures beginning on page 4-28 to recharge the battery to restore satisfactory performance.

## Frozen Battery

Since the electrolyte in a fully-discharged battery is mostly composed of water, the solution can freeze if exposed to cold temperatures for an extended period of time. Never leave discharged batteries outside if the temperature is at or below freezing.

If a battery is to be stored for an extended period at or below freezing, ensure the battery is fully charged before placing in storage.

The battery information contained in this publication is intended for a professional technicians. Please do no attempt any of the maintenance/repair procedures if you are not licensed or appropriately trained. Do not distribute or share the digital or printed material, including pdf versions of the content. Also, do not provide a link to this material to another website or email address. This material may be protected under copyright and trademark laws.